Arboricultural impact assessment and method statement for a proposed development at Heatherton Country Sports Park, St Florence, Tenby, SA70 8RJ

Prepared for:

Heatherton Country Sports Park Ltd.
St Florence
Tenby
Pembrokeshire
SA70 8RJ

Prepared by:

Paul Cleaver Cert Arb L6 (ABC), MArborA, CUEW, RCArborA
TreeConsultants.Wales

Date:

3rd December 2020

Document ref:

PC20-119

TREE CONSULTANTS WALES

TABLE OF CONTENTS

1 INTRODUCTION

1.1 **Instruction:** I am instructed by Hayston Developments & Planning Ltd. to carry out a survey of trees on and immediately adjacent to an area within Heatherton Country Sports Park proposed for development. The purpose of the survey is to provide the following information, in line with BS 5837:2012, to accompany the planning submission:

- a schedule of the relevant trees to include basic data and a condition assessment;
- an assessment of the impact of the proposal on trees and any resulting impact it has on local amenity; and
- an arboricultural method statement (AMS) dealing with the protection and management of the trees to be retained.

1.2 **Relevant guidance:** The British Standard 5837:2012 *Trees in relation to design, demolition and construction- Recommendations* provides a framework for considering trees in the planning process. It gives guidance on categorising the qualities of trees in order to enable decisions to be made as to which trees are appropriate for retention within the development. It then advises on options for protecting retained trees during all phases of the development.

1.3 **Overview:** The proposed development is located on a section of the site's golf course and includes new 'Meet & Greet' office, manager's dwelling, 24 holiday chalets, associated parking provision, access road and landscaping.

1.3.1 One tree within a group and a 15m section of hedge require removal to facilitate the development. Additionally, one tree within a hedgerow is recommended for coppicing due to its poor form. A number of ash trees have been previously marked for removal due to Ash dieback disease; it is assumed these will be removed prior to the proposed development commencing.

1.3.2 The presence of Tree Preservation Orders (TPO) or Conservation Area designation was not checked for the purpose of this survey.

1.3.3 All retained trees can be protected during construction works to ensure their roots, trunks and branches are not damaged during the development.

2 TREE SURVEY

2.1 **Site visits:** I undertook the survey on 8th September 2020. The weather at the time of the survey was overcast with light rain showers. Visibility was sufficient to enable clear observations of the trees. The area surveyed is shown in Figure 1, outlined in red.

Figure 1: survey area; Heatherton Country Sports Park
Image: Apple Maps

2.2 **Surveyed trees**: The tree survey schedule, Appendix 1, provides details of the four hedges, five tree groups and one individual tree present on or immediately adjacent to the proposed development site.

2.3 **Tree quality categorisation**: Each tree / tree group is allocated a category to reflect its suitability as a material constraint on development. The TreeABC field sheet, Appendix 2, provides detail of how the quality of the surveyed trees was categorised.

2.4 **Tree protection areas:** The schedule of protection areas, Appendix 3, provides detail of the extents of areas required around retained trees to provide adequate protection.

2.4.1 Adequate protection, both above and below ground, is essential to successfully retain trees within any development. BS 5837 recommends a root protection area (RPA) around trees which is kept free of all construction activities by means of protective barriers forming an enclosed construction exclusion zone (CEZ). The RPA is calculated as the area equivalent to a circle with a radius of 12 times the trunk diameter at a height of 1.5m above ground level or is determined by the root morphology of the surveyed trees, based on previous site development and root disturbance.

2.5 **Tree protection plan:** The tree protection plan (TPP), Appendix 4, shows the position of the trees surveyed as well as protection and precautionary measures necessary to successfully retain trees.

2.6 **Limitations**: My survey was of a preliminary nature and did not include any detailed tree safety inspections.

3 ARBORICULTURAL IMPACT ASSESSMENT

3.1 **Purpose:** This arboricultural impact assessment (AIA) provides an evaluation of the probable direct and indirect effects of the proposed development on the trees and vice versa. It considers the characteristics and condition of the trees, with due allowance for their future growth and maintenance requirements.

3.1.1 Where necessary, impact mitigation measures are recommended in the arboricultural method statement (AMS).

3.2 **Tree removals and pruning:** Tree removals and pruning required by the development proposal are detailed in Table 1.

Table 1: Trees that will be affected

	British Standard 5837 category			
	A (High quality)	B (Moderate quality)	C (Low quality)	U (Poor condition)
Trees to be removed	-	One tree within G.9	15m section of H.10	-
Trees to be pruned	-	-	-	-

Abbreviations: T = individual; G = group; H = hedge

In addition to the above tree removals, a significant number of recently planted young trees require removal. These trees are below the minimum 75mm stem diameter required for consideration in the planning system, and, in any case, will be replaced by proposed new planting.

The impact of the proposed development on local landscape character, privacy and screening will be **low.**

3.3 **Special precautions:** Trees requiring special precautions to protect them from potentially damaging development proposals are listed in Table 2.

Table 2: Trees that need to be protected by special precautions

	British Standard 5837 category		
	A (High quality)	B (Moderate quality)	C (Low quality)
Trees to be protected through special precautions (other than fencing and ground protection)	-	H.3	-

Abbreviations: T = individual; G = group; H = hedge

Assuming the AMS is followed correctly, the proposed development's impact on retained trees is considered to be **low.**

3.4 **Temporary activities:** Temporary activities, during construction, with the potential to damage retained trees are considered below:

3.4.1 **Site access:** The existing entrance and proposed new roads will provide sufficient access for vehicles into and around the site, outside the RPA of retained trees.
Impact: ***nil***

3.4.2 **Contractor car parking:** Contractor parking can be provided within the site, outside the RPA of retained trees.
Impact: ***nil***

3.4.3 **Workspace:** The site has sufficient space to accommodate all activities without encroaching the RPA of retained trees.
Impact: ***nil***

3.4.4 **Storage:** The site has sufficient space to accommodate storage requirements outside the RPA of retained trees.
Impact: ***nil***

3.5 **Future pressure:** Future pressure to remove or substantially prune retained trees is considered below.
Pressure arises where trees have the potential to cause damage to nearby structures or hard surfacing. Additionally, occupants of any new buildings may also be adversely impacted by trees retained in close proximity. Assessment of how the proposed development will be affected by the retained trees takes into consideration their future growth potential.

3.5.1 **Direct damage to structures:** Proposed structures are sufficiently distanced from retained trees to prevent direct damage from roots and branches.
Impact: ***nil***

3.5.2 **Shading:** The vast majority of retained trees are located on the north side of the proposed chalets. Shadows cast by the trees will therefore fall outside the developed area.
Impact: ***negligible***

3.5.3 **Seasonal nuisance:** Falling leaves, fruit and flowers have the potential to cause seasonal nuisance on site. However, general good housekeeping will prevent this becoming a significant issue.
Impact: ***low***

3.6 CONCLUSIONS ON THE IMPACTS OF THE DEVELOPMENT PROPOSAL ON LOCAL LANDSCAPE CHARACTER

The development proposal is sympathetic to the site's existing mature tree population. In addition, new planting and ecological enhancements have been included, as indicated on the proposed plan.

I therefore consider the proposal's impacts on local landscape character to be **positive** in the short, medium and long-term.

3.6.1 **Modifications recommended to reduce impacts and accommodate trees:** There are no modifications recommended.

4 ARBORICULTURAL METHOD STATEMENT (AMS)

4.1 **Purpose:** The purpose of the arboricultural method statement and tree protection plan is to describe how trees will be protected during site development. They are based on the following provided information:

- PLANNING DRAWINGS.dwg

4.1.1 A copy of this arboricultural method statement and tree protection plan must be permanently available on site for the duration of the development activity.

4.2 **Explanation of important terms**: An explanation of the important terms used within this arboricultural method statement is given below:

4.2.1 **Root protection areas (RPAs):** RPAs are the areas surrounding retained trees where disturbance must be minimised.

4.2.2 **Construction exclusion zone (CEZ):** CEZs protect the RPA by preventing all construction activities within the exclusion zone. Access is prevented by either installing fencing to restrict access, or installing ground-protection that allows limited access while protecting the rooting environment below.

4.2.3 **Precautionary area:** Precautionary areas protect RPAs, which are outside of CEZs, where limited construction activities are proposed. These activities must be carried out with care to minimise any impact on the tree rooting environment.

These areas are illustrated on our plans and annotated as shown in Figure 2.

Figure 2: Plan annotations

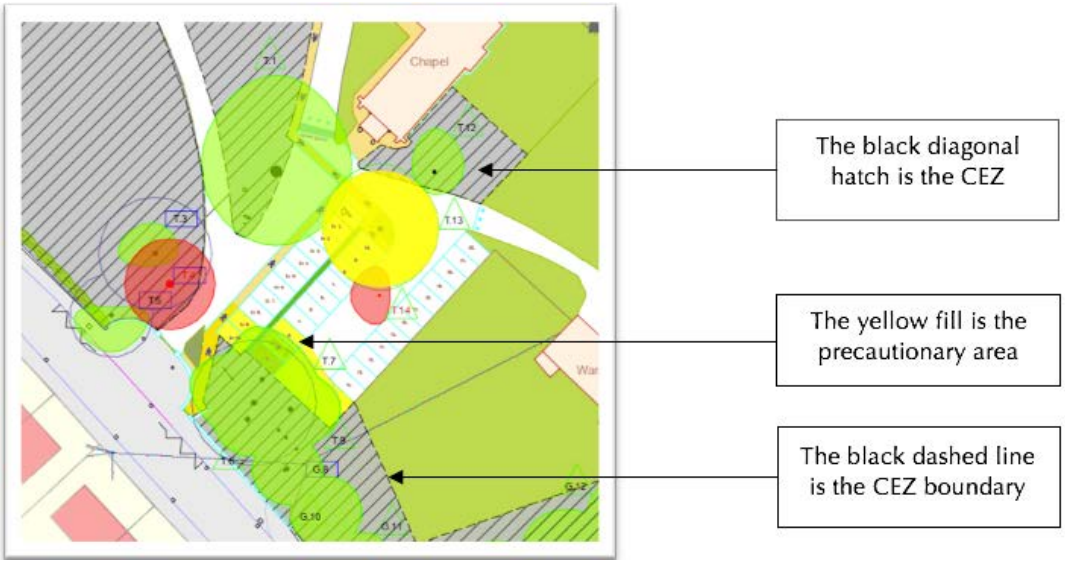

4.3 **How trees are damaged**: Trees are very easily damaged during construction activities. Their branches can be broken by construction traffic passing close to the canopy or by root severance during the digging of foundation or service trenches. The majority of roots occupy the upper 600mm of soil; therefore, even relatively shallow trenches can sever a significant number of roots growing across the direction of the trench. Similarly, the diameter of tree roots tapers sharply within a few metres of the trunk of a tree. As a result, what might seem to be an insignificant root (perhaps only a few centimetres in diameter) may actually be highly important.

4.3.1 Tree roots can also be damaged indirectly, often inadvertently, through soil compaction. Compaction disrupts soil structure and can lead to root death through the development of anaerobic soil conditions. Spillage of toxic materials (e.g. oil or diesel) can also result in root damage and ultimately the death of a tree. Protection of the soil around trees by means of a CEZ is therefore vitally important in order to preserve roots undamaged.

4.4 **Protective barriers**: A combination of the protective barriers specified below are considered fit for purpose, taking into account the nature of adjacent activities and the value of the trees.

4.4.1 **Barrier specification:** Welded mesh panels, 2m tall, on rubber or concrete feet. The fence panels should be joined together using a minimum of two anti-tamper couplers, installed so that they can only be removed from inside the fence. The distance between the fence couplers should be at least 1m and should be uniform throughout the fence. The panels should be supported on the inner side by stabilizer struts mounted on a block tray (Figure 3).

Figure 3: Barrier—Heras fencing panels

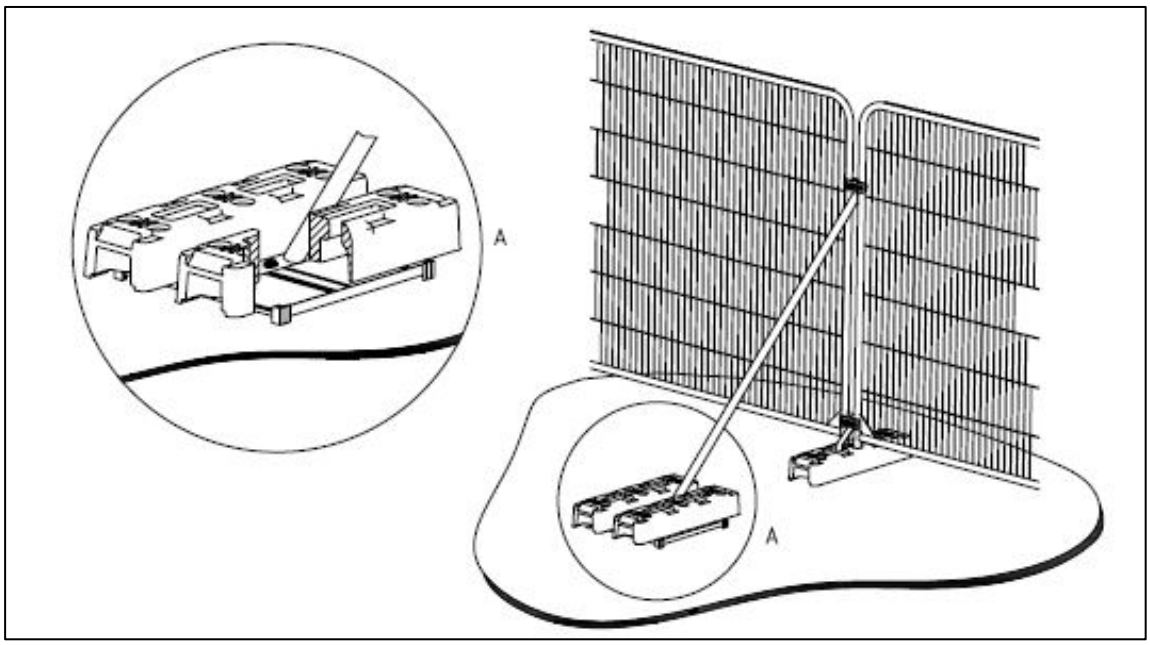

4.4.2 **Barrier specification:** Orange plastic mesh fencing attached to steel pins, driven 600mm into the ground at 1.5m centres (Figure 4).

Figure 4: Barrier—orange plastic mesh fencing

4.4.3 **Signage:** Attached to the protective barrier fencing, at various locations, will be laminated copies of the sign shown in Figure 5. Copies of this sign are available for download at: *https://www.treeconsultants.wales/about/resources/category/11-trees-and-development.html*

Figure 5: Signs to be attached to protective barriers

4.5 **Responsibility**: Responsibility for tree related issues are detailed below:

4.5.1 **General site management**: It is the Main Contractor's responsibility to ensure that the details of this arboricultural method statement and any agreed amendments are known and understood by all site personnel. Copies of the agreed documents will be available on site

and the site manager will brief all personnel who could have an impact on trees on the specific tree protection requirements. This will be a part of the site induction procedures and written into appropriate site management documents.

4.5.2 **The key contacts**: Details of those with responsibility for tree related issues on this site are provided in Table 3.

Table 3: Key contacts

Responsibilities	Name	Contact details
Local Authority Arboricultural Officer	Richard Staden *Pembrokeshire County Council*	01437 764551
Planning consultant / Architect	*Hayston Developments & Planning Ltd.*	01437 891817
Main Contractor	TBC	-
Arboricultural Consultant	Paul Cleaver *TreeConsultants.Wales*	01437 899888

4.6 **Arboricultural supervision:** Subject to contractual arrangements being in place, TreeConsultants.Wales will be the Arboricultural Consultants supervising the protection of trees on this project. The form and purpose of the arboricultural supervision is typically as follows:

4.6.1 **Pre-commencement meeting:** Held on site before any of the site clearance and construction work begins. This meeting is where the details of the programme of tree protection will be agreed and finalised, which will then form the basis of any supervision arrangements between the Arboricultural Consultant and the developer.

4.6.2 **Ongoing supervision of operations that could affect trees:** Once the site is active, the Arboricultural Consultant will visit at intervals agreed at the pre-commencement site meeting.

4.6.3 **Proof of compliance to help refute liability and facilitate the discharge of planning conditions:** All supervisory visits will be formally confirmed in writing and circulated to all relevant parties, including the Local Planning Authority (LPA). The purpose of these written records is firstly, to provide proof of compliance that will allow the developer to robustly demonstrate adherence to best practice in the event of any disputes, and secondly, to help the LPA efficiently discharge the relevant planning conditions.

4.7 **Construction phasing:** A preliminary programme of construction phasing and arboricultural input is set out in Table 4.

Table 4: Construction phasing

Phase		
1	PRECOMMENCEMENT	
	Activity	Arboricultural input
	Pre-commencement meeting	• With main contractor to finalise tree protection requirements and specific AMSs (where applicable) • Submission of any specific AMSs to LPA for approval
	Tree work	• Liaison with tree work contractor, as required, to confirm specification of permitted works
	Setting out and marking up	• Liaison with contractor, as required, to set out the section of road adjacent to H.3 to minimise impacts to trees
	Installation of tree protection barriers	• Liaison with contractor to confirm specification and extent of required barriers
2	CONSTRUCTION	
	Activity	Arboricultural input
	Construction works	• Remain as point of contact to advise on any arboricultural issues that may arise • Collection of photographic evidence to discharge any tree protection conditions attached to the planning consent
3	LANDSCAPING & FINAL TIDY UP	
	Activity	Arboricultural input
	Landscaping / making good	• Liaison with contractors, as required
	Removal of tree protection barriers	• Liaison with contractors, as required

Note: *The precise order and timing of some of the above operations may change due to site operating requirements, but all operations that can affect trees will remain under arboricultural supervision.*

4.8 **Tree work:** The proposed tree works are set out in the Notes & Work recommendations column of the tree schedule in Appendix 1. The trees to be removed are highlighted with red text in the schedule and shown on the plan with a red crown fill. Where appropriate, to facilitate access, all crowns of retained trees should be lifted to 3–4m above the site. Only works in excess of this have been listed for individual trees. The following points should also be noted before carrying out any works:

4.8.1 **Implementation of works:** All tree works must be carried out with regard to BS 3998 Recommendations for Tree Work as modified by more recent research. *It is advisable to select a contractor from the local authority list and preferably one approved by the Arboricultural Association. The Arboricultural Association's register of Contractors is available free from The*

Malthouse, Stroud Green, Standish, Stonehouse, Gloucestershire GL10 3DL; phone 01242 522152; website http://www.trees.org.uk/

4.8.2 **Statutory wildlife obligations:** The Wildlife and Countryside Act 1981 as amended by the Countryside and Rights of Way Act 2000 provides statutory protection to birds, bats and other species that inhabit trees. All tree work operations are covered by these provisions and advice from an ecologist must be obtained before undertaking any works that might constitute an offence.

4.8.3 **Stumps:** Stumps to be removed within the RPAs of retained trees must be ground out with a stump grinder to minimise any disturbance, unless otherwise authorised by the appointed arboricultural consultant.

4.9 **Precautionary areas:** A section of proposed new road is close to the CEZ of the hedgerow H.3. Although it is unlikely any significant roots will be encountered in this area due to root morphology (see Appendix 3), a precautionary area has been put in place. Precautions required for works within this area are listed in Table 5 below:

Table 5: Precautions required for work within the RPA

Activities	Precautions
Construction of section of new road, south of H.3	• All works to be undertaken outside of the protective barriers. • Roots smaller than 25mm diameter may be pruned back, making a clean cut with a suitable sharp tool (e.g., bypass secateurs or handsaw), except where they occur in clumps. Roots occurring in clumps, or of 25mm diameter and over, should be severed only following consultation with the Arboricultural Consultant, as such roots might be essential to the trees' health and stability. • All spoil and materials to be stored outside of the CEZ and precautionary area.

4.10 **Precautions outside RPAs**: Any risk to trees from activities outside RPAs, but close enough to have a knock-on impact, will be assessed during the day-to-day running of the site and appropriate precautions put in place to reduce that risk.

4.10.1 **Prevention of soil contamination:** All cement mixing and washing points for equipment will be outside RPAs. Where the contours of the site create a risk of polluted water or toxic liquids running into RPAs, a precautionary measure of using heavy-duty plastic sheeting and sandbags with the ability to contain accidental spillages will be put in place to prevent contamination. Contaminated mixer and tool wash water shall be decanted into a sealed container and transported off site for appropriate disposal.

4.10.2 **Burning of waste:** No fires will be lit on site within 3m of root protection areas due to the danger of scorching leaves and branches of overhanging trees.

4.11 **Installation of new services:** The installation of new services within the RPA of any retained trees is not permitted.

Appendix 1: Tree schedule and explanatory notes

NOTE: Colour annotation is: A & B trees with green background; C & U trees with blue background; trees to be removed in red text.

Tree No.	Species	Height (m)	Stem dia. (mm)	Maturity	Crown spread (m)				Low branches	Cat.	Notes & Work recommendations
					N	S	E	W			
H.1	Ash Willow Sycamore Holly Oak Beech	13 max.	400 max	Mature	9.5	9.5	9.5	9.5	No	C3 & C8	Ash trees infected with ash dieback disease (ADB), marked with red crosses on stems Thorn and hazel understorey Ditch on northwest side curtailing root spread
G.2	Willow Ash Sycamore	13 max.	300 max.	Maturing and mature	5	5	5	5	No	C8	Edge of woodland Remnant drainage ditch on west side Ash trees infected with ADB
H.3	Ash Oak Willow	13 max.	400 max.	Maturing and mature	7	7	7	7	No	B	Ash trees infected with ADB, marked with red crosses on stems Thorn understorey Established on hedgebank with shallow drainage ditch on southeast side
G.4	Oak x8 Ash x1	15*	1000 max.	Mature	10.5	10.5*	10.5	10.5	No	A1	Growing on very low hedgebank
H.5	Oak Ash Willow	15	1000 max.	Mature	12	12	12*	12	No	A1	Ash infected with ADB, marked with red crosses on stems Thorn understorey
H.6	Ash Sycamore	15*	500 max.	Mature	8*	8	8	8	No	C3 & C8	Willow, oak and holly understorey Deep and wide ditch on northwest side Ash infected with ADB
G.7	Ash x4 Hawthorn x1	9.5*	350 max.	Maturing and mature	5	5	5	5	No	C1 & C3	3x mature and 1x maturing ash trees Ash trees infected with ADB Largest ash marked with red cross on stem
T.8	Crab apple	6.5*	300	Mature	4	4	4	4	Yes	B	Low branches on all sides from 1.5m
G.9	Willow x1 Hawthorn x 3	7	200 max.	Mature	4	4	4	4	No	B	Blackthorn and hazel understorey 2m buffer from base of hedgebank on both sides Willow has poor form from previous pruning work **Remove 1x hawthorn to facilitate development** **Coppice willow**
H.10	Birch Alder Sorbus Oak Cherry	-	150	Young	-	-	-	-	No	C1	**Remove 15m section of hedge and hedgebank to facilitate development**

Appendix 1: Tree schedule and explanatory notes (cont.)

- **Abbreviations:**

T	: Individual
G	: Group
H	: Hedge
RPA	: Root protection area

BS 5837 (2012) compliance: All data has been collected based on the recommendations set out in subsection 4.4 of BS 5837.

- **Future tree safety inspections:** Our assessment of the trees was carried out on the basis that a re-inspection would be carried out within 2 years of our assessment visit.

- **Site limitations:** Where there is restricted access to the base of a tree, its attributes are assessed from the nearest point of access. Climbing inspections are not carried out during a walkover tree survey and, if heavy ivy is present, tree condition is assessed from what can be seen from the ground. A separate note is recorded if further investigation may be required to clarify its status.

- **Crown spreads:** The crown spread measured from the centre of the trunk to the tips of the live lateral branches and rounded up to the nearest half metre for dimensions up to 10m and the nearest whole metre for dimensions over 10m, N= north, S= south, E= east and W=west.

- **Dimensions:** All dimensions are estimated unless annotated with '*'.

- **Species:** Species identification is based on visual observations. Where there is more than one species in a group, only the most frequent are noted and not all the species present may be listed.

- **Height:** Height is estimated to provide an indication of the size of the tree.

- **Stem diameter:** Stem/trunk diameter is estimated or measured and recorded in 2.5cm increments as advised in BS 5837 Table D1. It is measured with a diameter tape unless access is restricted, direct measurement is not possible because of ivy on the trunk or the tree is assessed as poor quality. The point of measurement and the adjustments for stem variations are as advised in Figure C1 of BS 5837.

- **Maturity:** In a planning context, maturity provides a simplistic indication of a tree's ability to cope with change and its potential for further growth. For the purposes of this report, 'young' indicates a potential to significantly increase in size and a high ability to cope with change, 'maturing' indicates some potential to increase in size and some ability to cope with change and 'mature' indicates little potential to increase in size and limited ability to cope with change.

Appendix 1: Tree schedule and explanatory notes (cont.)

- **Low branches:** Any low branches that would not be feasible for removal during normal management and should be considered as a design constraint are noted here and explained in the notes.

- **Cat:** Tree retention category awarded according to the criteria detailed on the TreeABC field sheet provided overleaf. Our assessment automatically considered tree physiological/structural condition (BS 5837, 4.4.2.5h) and so these are not listed separately in the schedule. Additionally, the category accounts for the remaining contribution (BS 5837, 4.4.2.5i) as greater than 40 years for A trees, greater than 20 years for B trees, at least 10 years for C trees and less than 10 years for U trees, so this is also not listed separately in the schedule.

- **Notes:** Only relevant features relating to physiological or structural condition and low branches that may help clarify the categorisation are recorded. If there are no notes, then the presumption should be that no relevant features were observed.

- **Tree works:** The inspection of all trees was of a preliminary nature and only defects visible from the ground have been identified. Each individual tree may not have been inspected closely because of access difficulties. In addition to tree removals for development and management reasons, further works are listed to reduce the threats from retained trees.

Appendix 2: Tree categorisation method

TreeABC field sheet (Version 16.03-UK)

Ancient/veteran: Each tree is assessed by a visual check. If it is a veteran/ancient tree, then it is automatically categorised as A2, and not subjected to any of the category U, C or B considerations.

Category U (unsuitable for retention): Any remaining trees that are unsuitable for retention because they are dead; in irreversible decline; and/or have irremediable structural conditions; and/or are causing severe structural damage or inconvenience, are categorised as U.

Category C (low quality): Any remaining trees are systematically reviewed to decide if they fit into any of the four C subcategory groups listed below.

Category B (moderate quality): Any remaining trees are automatically category B, with the possibility of being promoted to category A.

Category A (high quality): If a category B tree is already large, or has the potential to become so, it can be promoted to category A, at the discretion of the assessor.

Category C: Low quality trees not worthy of being a material constraint

C		**Size and legal exemptions:** Trees that are too small to be important or unlikely to be suitable for legal protection
	1	**Size:** Young or insignificant small tree
	2	**Legal exemptions:** Trees unlikely to be suitable for legal protection, e.g. a maintained urban hedge, shrubs, etc
		Deteriorating health/condition: Trees that are likely to be removed within 10 years because of deteriorating health and/or structural condition
	3	**Health:** Deteriorating health with little realistic prospect of recovery
	4	**Crown instability:** Deteriorating structural conditions where an increasing risk of failure can be temporarily addressed by reasonable intervention, e.g. storm damage, cavities, decay, included bark, wounds, excessive imbalance, etc
	5	**Root instability:** Deteriorating whole tree stability through poor anchorage, increased exposure to weather, etc
		Excessive nuisance: Trees that are likely to be removed within 10 years because of unacceptable impact on people
	6	**Inconvenience:** Ongoing and increasing inconvenience to residents to the extent that a TPO appeal is likely to result in tree removal, e.g. dominance, debris, interference, etc
	7	**Damage:** Ongoing and increasing structural damage to property to the extent that a TPO appeal is likely to result in tree removal, e.g. severe damage to surfacing and structures, etc
		Good management: Trees that are likely to be removed within 10 years through responsible management of the tree population
	8	**No future potential:** Poor condition or location with no realistic potential for recovery or improvement, e.g. dominated by adjacent trees or buildings, poor architectural framework, etc
	9	**Benefit nearby trees:** Removal would benefit better adjacent trees, e.g. relieve physical interference, suppression, etc
	10	**Maintenance costs:** Unacceptably high maintenance costs, e.g. structural conditions requiring high levels of regular pruning, etc

NOTE: Although C trees are not worthy of influencing new designs, urgent removal is not essential and they could be retained in the short term, if appropriate.

Categories B and A: Moderate and high quality trees suitable for retention for more than 10 years, and worthy of being a material constraint

B	All trees that are not categories U or C that can be retained with minimal or limited intervention

NOTE: Category B trees that are already large, or have the potential to become so, with minimal or limited intervention, can be promoted to category A1, at the discretion of the assessor. Veteran/ancient trees are automatically category A2. Although all category A and B trees are sufficiently important to be material constraints, category A trees are at the top of the categorisation hierarchy and should be given the most weight in any selection process.

A	1	Single category B trees or small groups which, at the discretion of the assessor, have been promoted to category A because they are already large, or have the potential to become large
	2	Veteran/ancient tree

Further explanation of this enhancement of the BS 5837 method can be found at www.TreeAZ.com.

Appendix 3: Schedule of protection areas

Tree No.	Species	Stem Dia. (mm)	BS5837:2012 Root protection area, RPA, (m^2)	Minimum radial protection distance from base of tree, (m)		Justification for RPA modification	**Position of barrier**
				BS5837:2012	Modified		
H.1	Ash Willow Sycamore Holly Oak Beech	400 max.	72	4.80	Edge of ditch on northwest side	Ditch limiting root spread on north side	**Edge of ditch on northwest side**
G.2	Willow Ash Sycamore	300 max.	41	3.60	5 on west side	To accommodate canopy spread	**5m from tree bases**
H.3	Ash Oak Willow	400 max.	72	4.80	7 on southeast side from base of bank	To accommodate canopy spread	**7m from base of bank**
G.4	Oak x8 Ash x1	1000 max.	452	12.00	10.5 on southeast from base of bank	To accommodate canopy spread	**10.5m from base of bank**
H.5	Oak Ash Willow	1000 max.	452	12.00	12 on east side from base of bank	To accommodate canopy spread	**Minimum 12m from base of bank**
H.6	Ash Sycamore	500 max.	113	6.00	6 on west side from top of ditch	To accommodate canopy spread	**Minimum 6m from top of ditch**
G.7	Ash x4 Hawthorn x1	350 max.	55	4.20	5 on all sides	To accommodate crown spreads	**Minimum 5m from tree bases**
T.8	Crab apple	300	41	3.60	4 on all sides	To accommodate crown spread	**Minimum 5m from tree base**
G.9	Willow x1 Hawthorn x 2	200 max.	18	2.40	4 on all sides	To accommodate crown spread of hawthorns	**4m from tree bases**
H.10	Birch Alder Sorbus Oak Cherry	150	10	1.8	2m from base of bank on east Along edge of existing road on west	Due to hedgerow root morphology and previous disturbance	2m from base of bank on east Along edge of existing road on west

Appendix 4: Tree protection plan

Protective barrier specification

2m tall welded mesh panels on rubber feet and supported on the inner side by stabiliser struts attached to a base plates. The panels to be joined by at least 2 anti-tamper couplers, installed so they can only be removed from inside the fence.

Orange mesh fencing supported on steel pins set at 2m centres

Signage to be attached to barrier fencing

Precautionary area

* All works to be undertaken outside the protective barriers
* Roots smaller than 25mm diameter may be pruned back, making a clean cut with a suitable sharp tool. Roots in clumps or greater than 25mm diameter to be severed only after consent from the Arboricultural Consultant
* All spoil and materials to be stored outside the CEZ and precautionary area

ALL COPIES OF THIS PLAN MUST BE REPRODUCED IN COLOUR

20m 0 20m 40m 60m 80m 100m

KEY

A high or moderate quality tree.

A low or poor quality tree.

Numbering

1 = The **tree identification number** in survey schedule.

Number prefixes:

T = An **individual tree**
G = A **group of trees**
H = A **hedgeline** formed by trees

Crown spread of tree/s being retained, following any recommended pruning

Crown spread of tree/s recommended for pruning

Crown spread of tree/s being removed

Positioning of weld mesh protective barriers

Positioning of orange plastic mesh protective barriers

Construction exclusion zone (CEZ)
Area where no construction activities are permitted and access is prevented by protective barriers

Precautionary area
Area within RPA of retained trees where limited construction activities are permitted subject to specified precautions

TREE CONSULTANTS WALES
Springfield, Tiers Cross, Haverfordwest, Pembrokeshire SA62 3DG
01437 899 888
paul@treeconsultants.wales

CLIENT: Heatherton Country Sports Park Ltd.
St Florence
Tenby
Pembrokeshire
SA70 8RJ

SITE: HEATHERTON COUNTRY SPORTS PARK

TITLE: TREE PROTECTION PLAN

SCALE AT A2:	DATE:	DRAWN:	CHECKED:
1:1000	03/12/20	PC	JN

DRAWING REF.: PC20-119-TPP

TreeConsultants.Wales
Springfield
Tiers Cross
Haverfordwest
Pembrokeshire
SA62 3DG

01437 899888
info@treeconsultants.wales
www.treeconsultants.wales